ASSEMBLY INSTRUCTION

WALLS

2 DRAWER BEDSIDE

ITEM CODE 84766

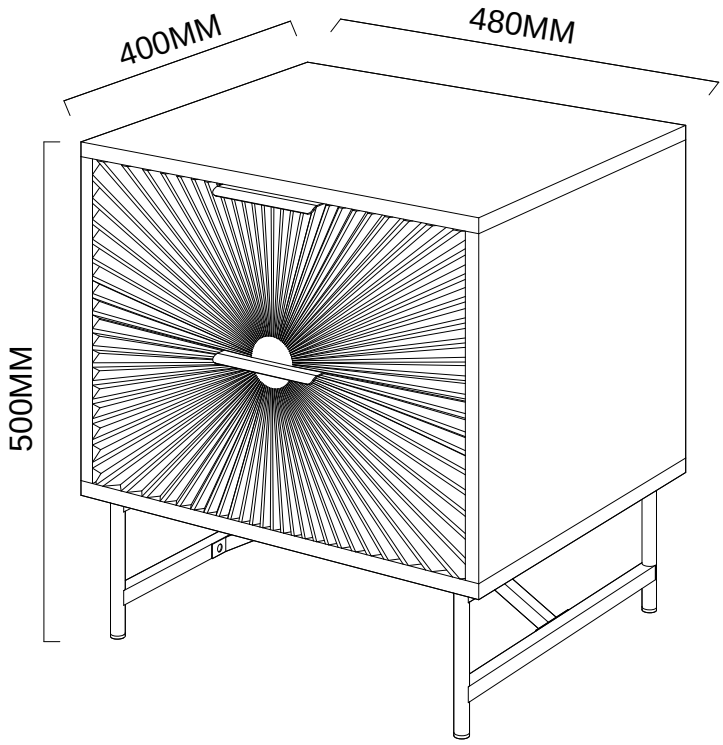

Imported by JWA Furniture Pty Ltd, Qld, Brisbane Australia.
For any assistance with assembly or for missing parts please refer to your receipt

PRE-ASSEMBLY PREPARATION

Before you start:

1.Choose a clean, level, spacious assembly area. Avoid hard surfaces that may damage the product
2.Take care when lifting. Product should be assembled as near as possible to the point of use
3.Ensure that you have all required contents for complete assembly
4.Always read the assembly instructions carefully before beginning assembly.
5.Keep all hardware parts and packaging out of reach of small children.
6.Do not over tighten the screws and bolts as this may damage the threads

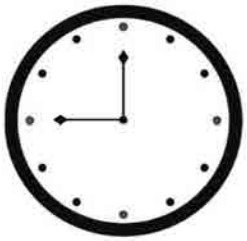	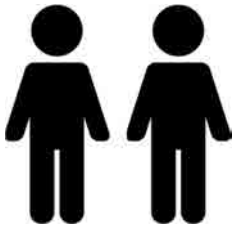	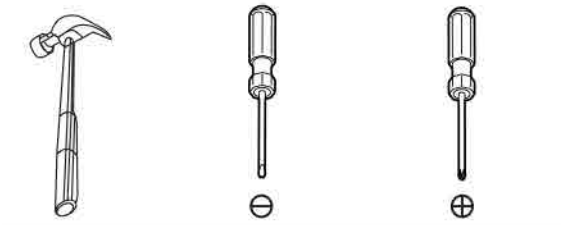
Allow 45 min	For 2 person	Additional tools required

PARTS LIST

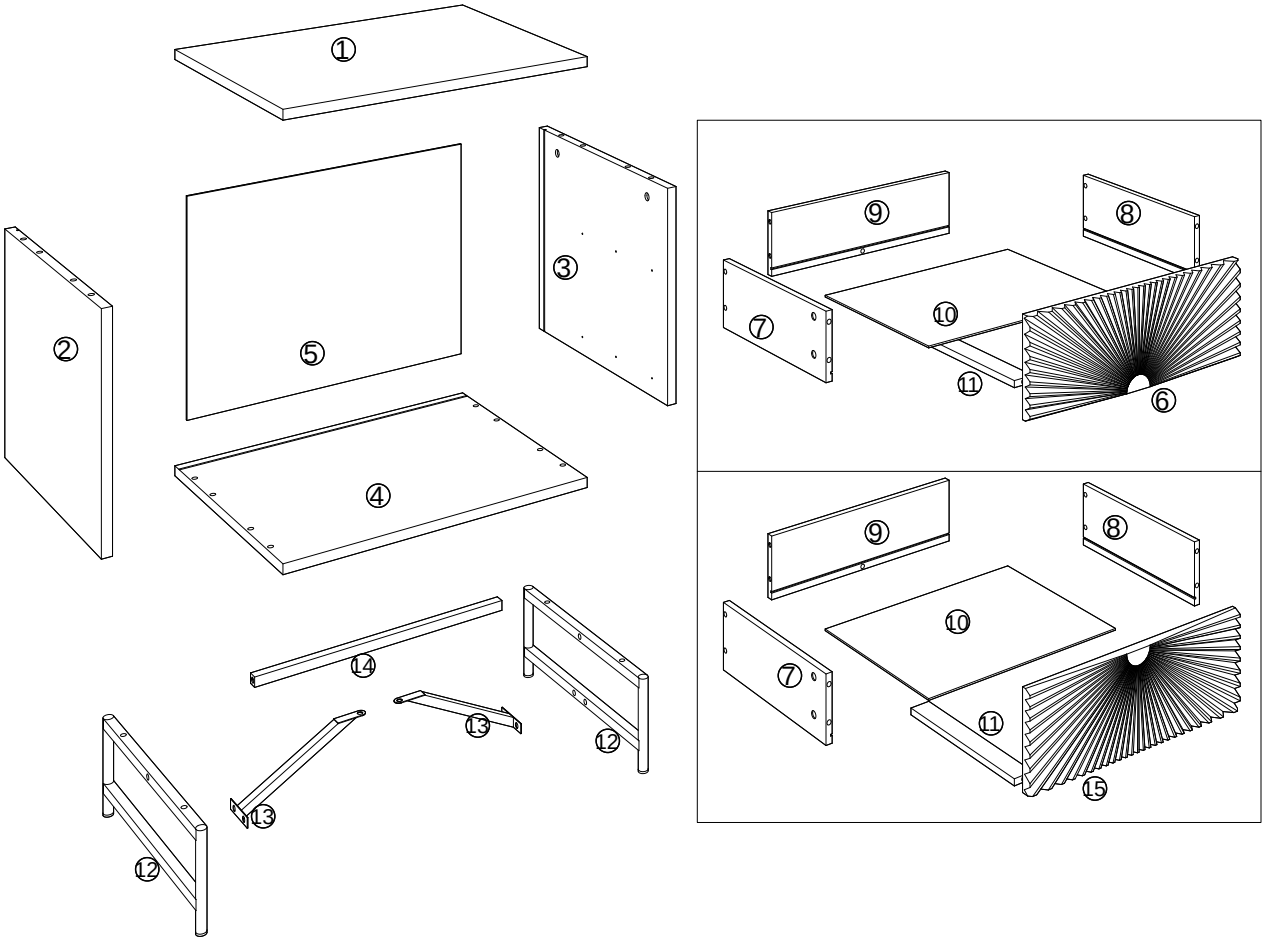

PARTS LIST

NO.	ITEM	QTY	NO.	ITEM	QTY
A	Φ6*35	14PCS	I	Φ6*12	6PCS
B	Φ15*10	14PCS	J	Φ6*25	4PCS
C	Φ8*30	8PCS	K	Φ6*35	2PCS
D	Φ4*35	14PCS	L		2PCS
E		1PC	M	Φ3*12	28PCS
F	Φ3*16	4PCS	N	CL DL CR DR 30CM	2PCS
G		4PCS			
H		1PC			

NO.	ITEM	QTY	NO.	ITEM	QTY
①	TOP PANEL	1 PC	⑨	DRAWER BACK PANEL	2 PCS
②	LEFT SIDE PANEL	1 PC	⑩	DRAWER BOTTOM PANEL	2 PCS
③	RIGHT SIDE PANEL	1 PC	⑪	DRAWER SUPPORT PANEL	2 PCS
④	BOTTOM PANEL	1 PC	⑫	LEG	2 PCS
⑤	BACK PANEL	1 PC	⑬	BOTTOM SUPPORT METAL	2 PCS
⑥	DRAWER FRONT PANEL	1 PC	⑭	BOTTOM SUPPORT METAL	1 PC
⑦	DRAWER LEFT SIDE PANEL	2 PCS	⑮	DRAWER FRONT PANEL	1 PC
⑧	DRAWER RIGHT SIDE PANEL	2 PCS			

STEP 1:

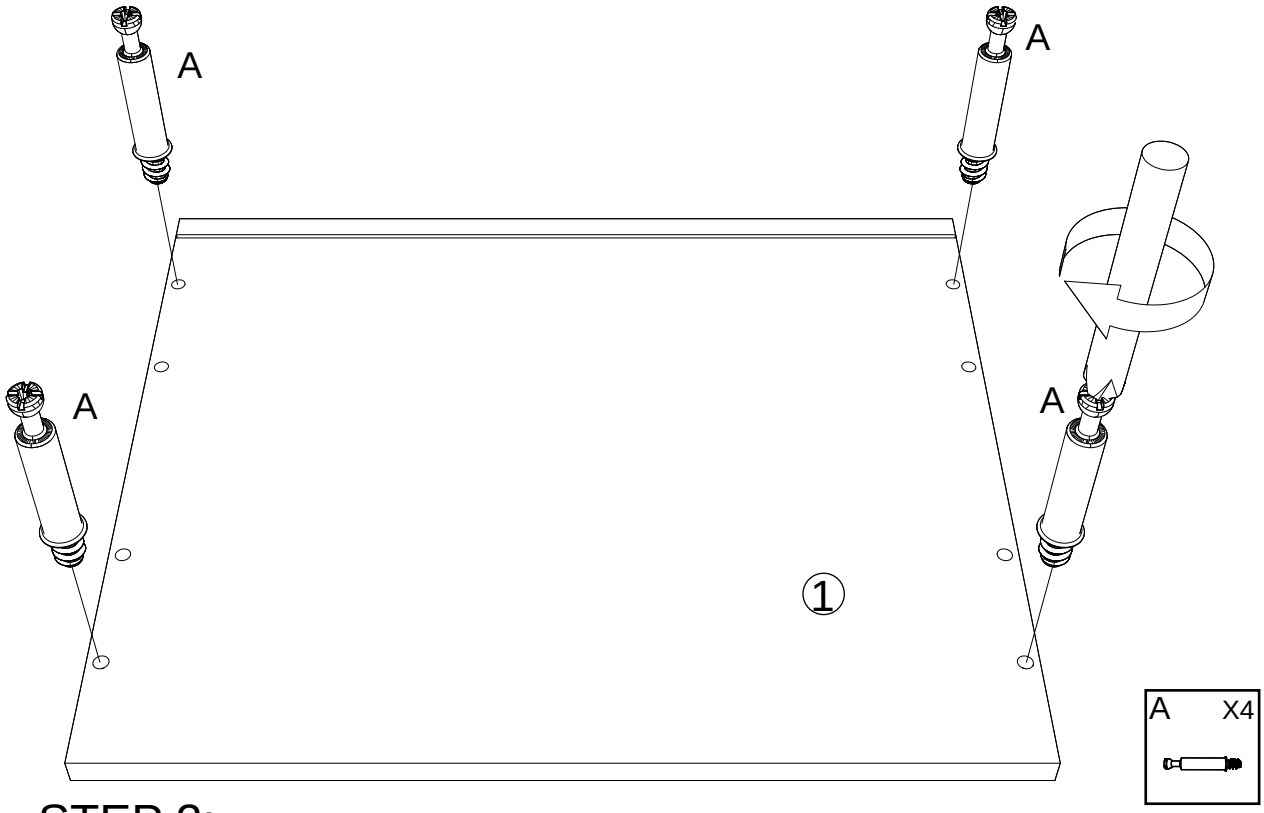

STEP 2:

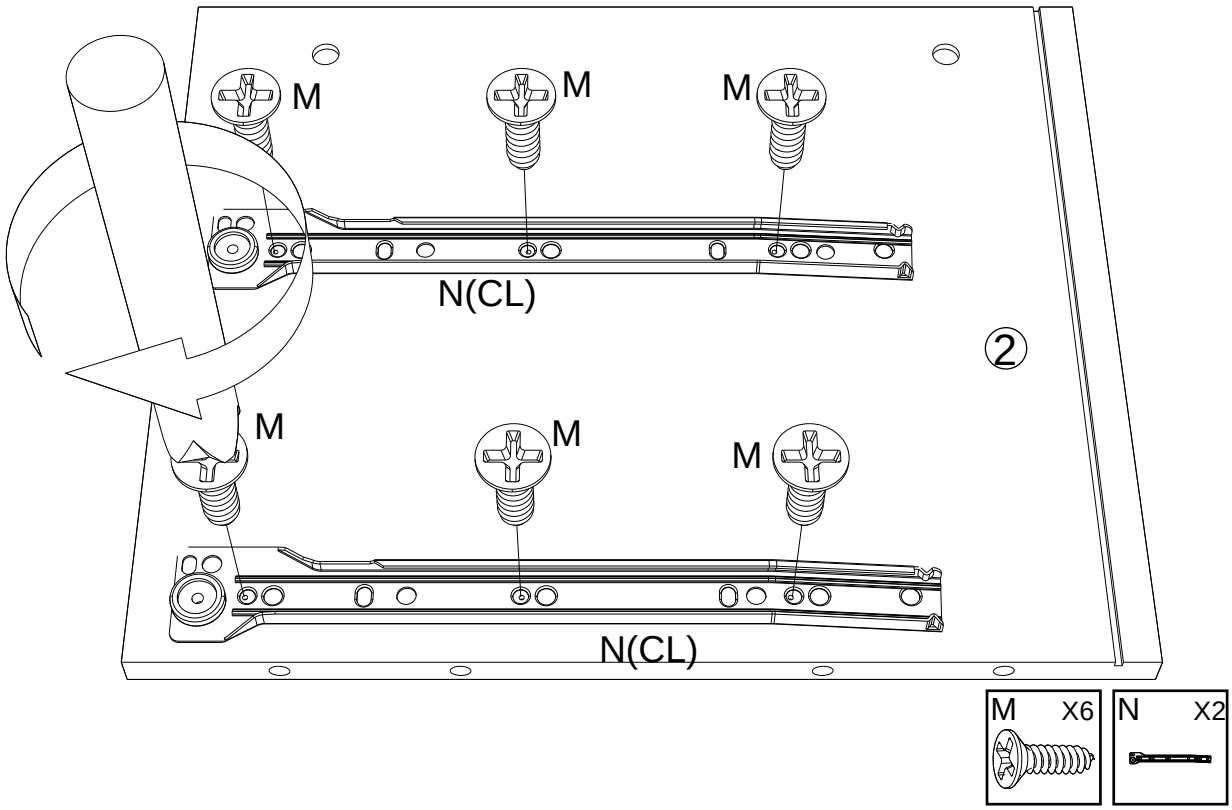

STEP 3:

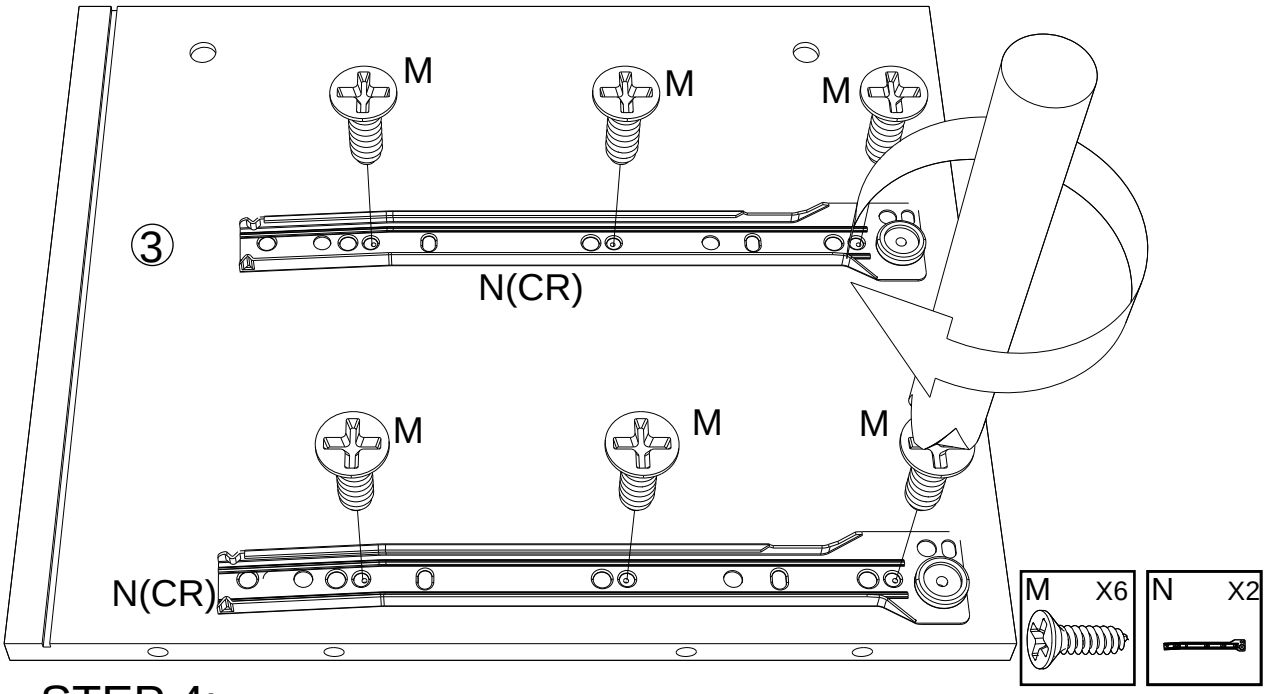

STEP 4:

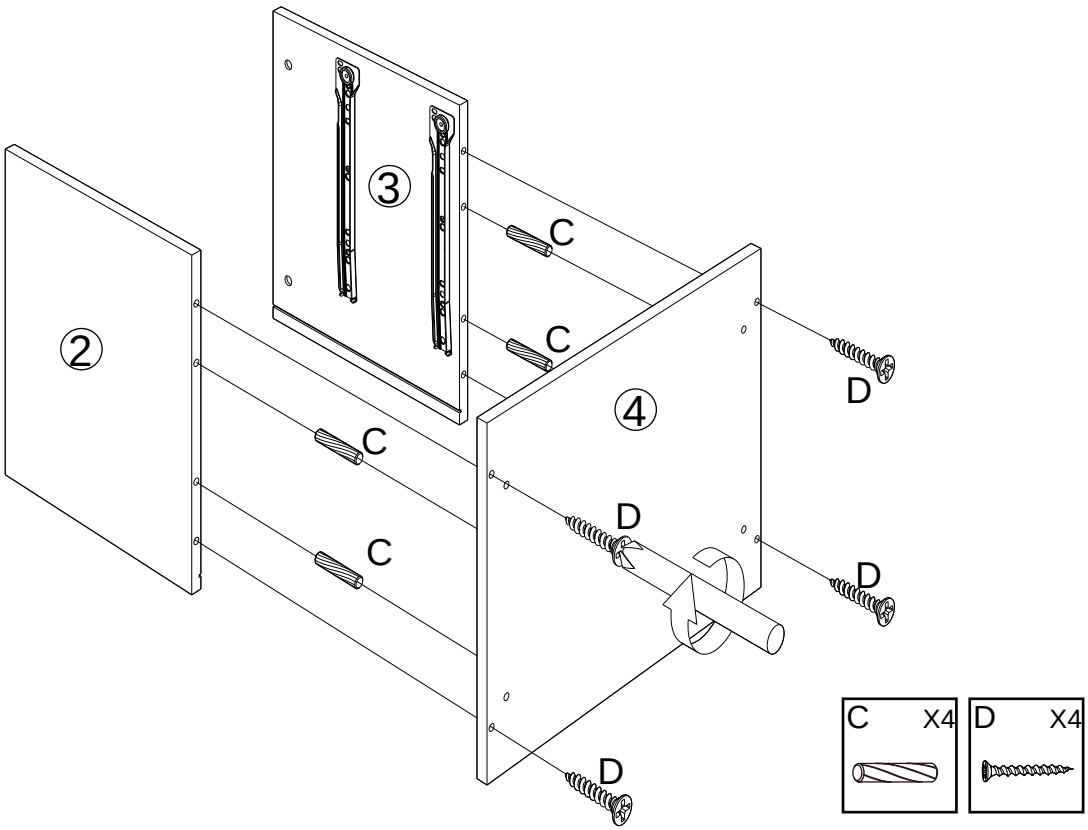

STEP 5:

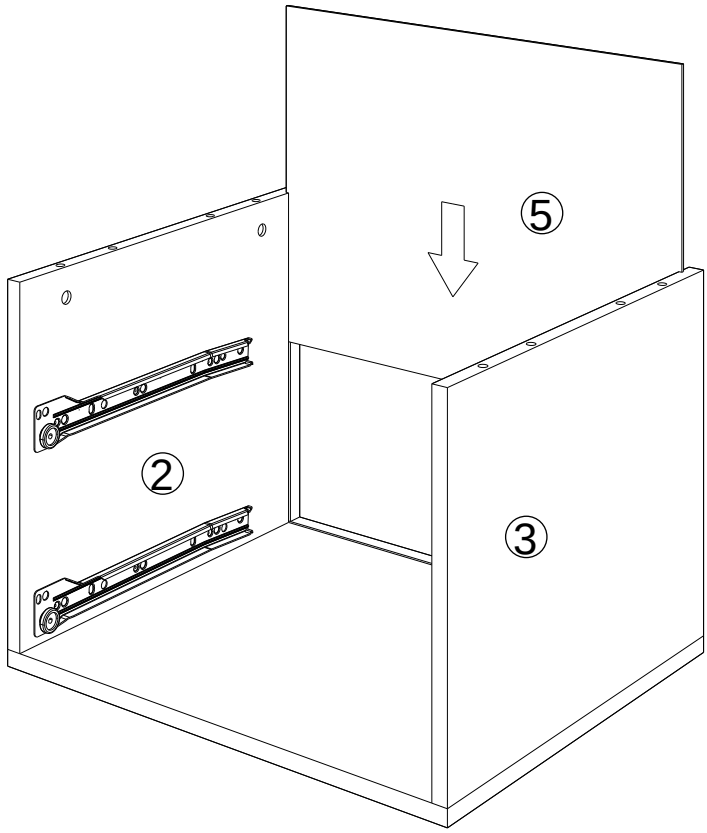

STEP 6:

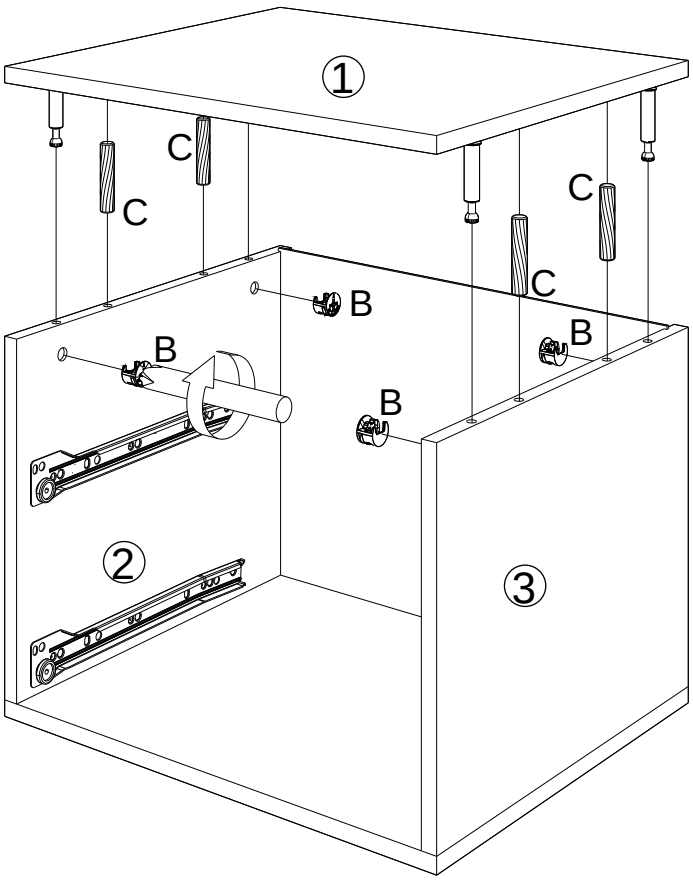

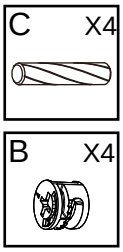

STEP 7:

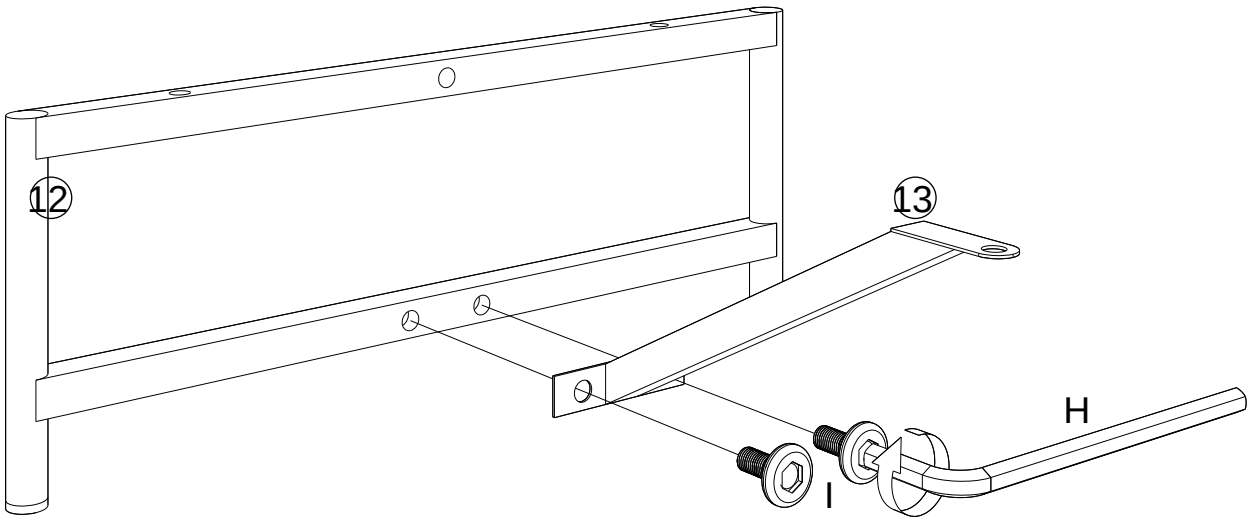

X2

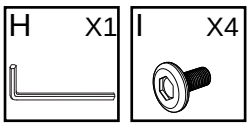

STEP 8:

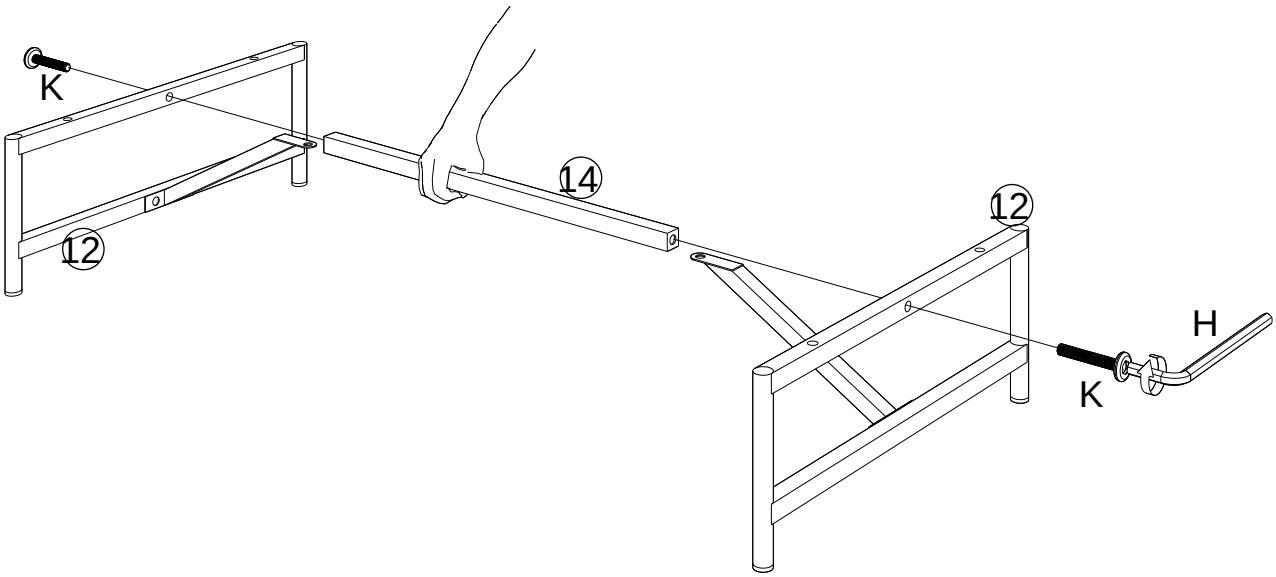

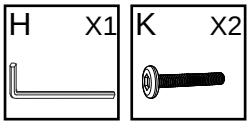

STEP 9:

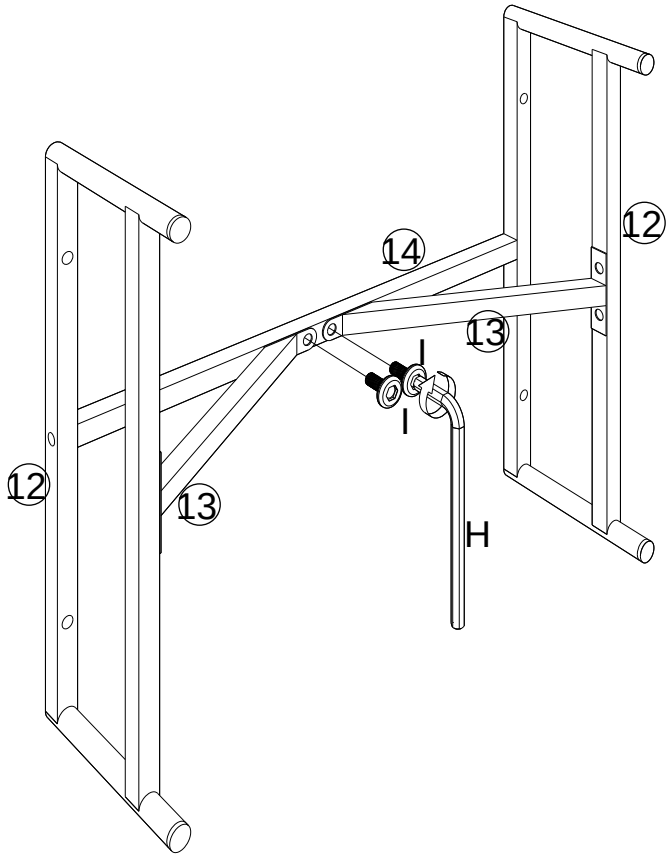

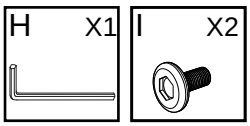

STEP 10:

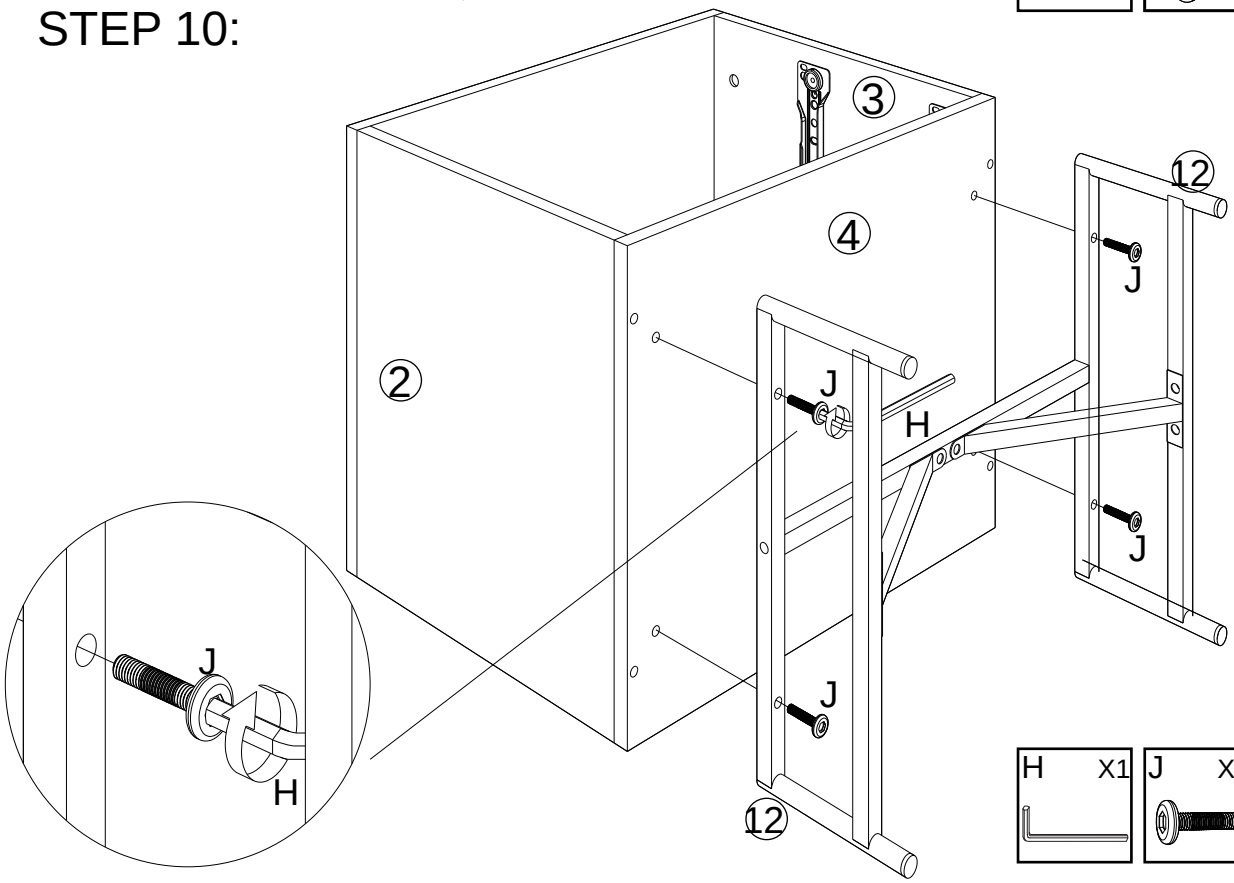

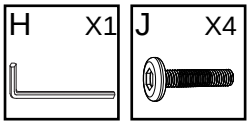

STEP 11:

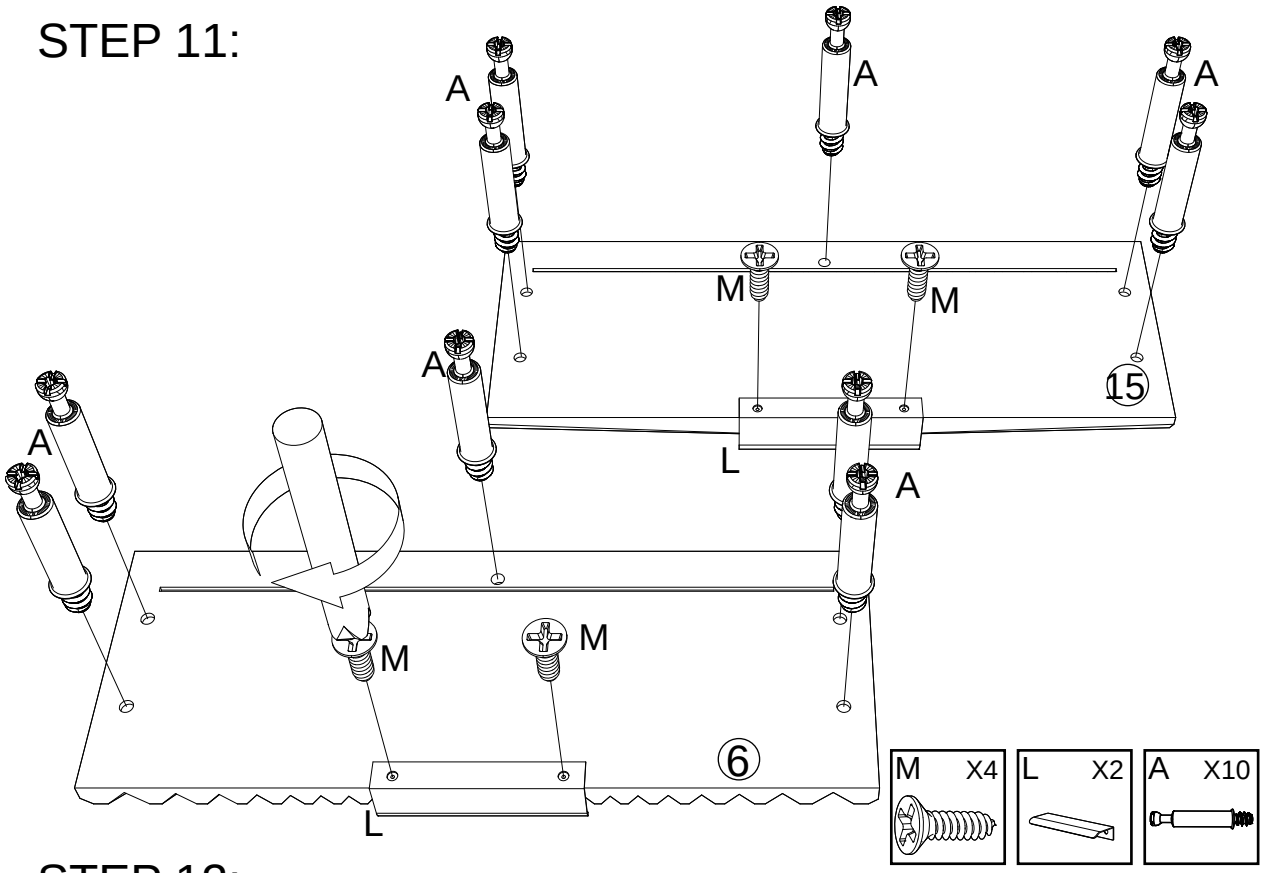

STEP 12:

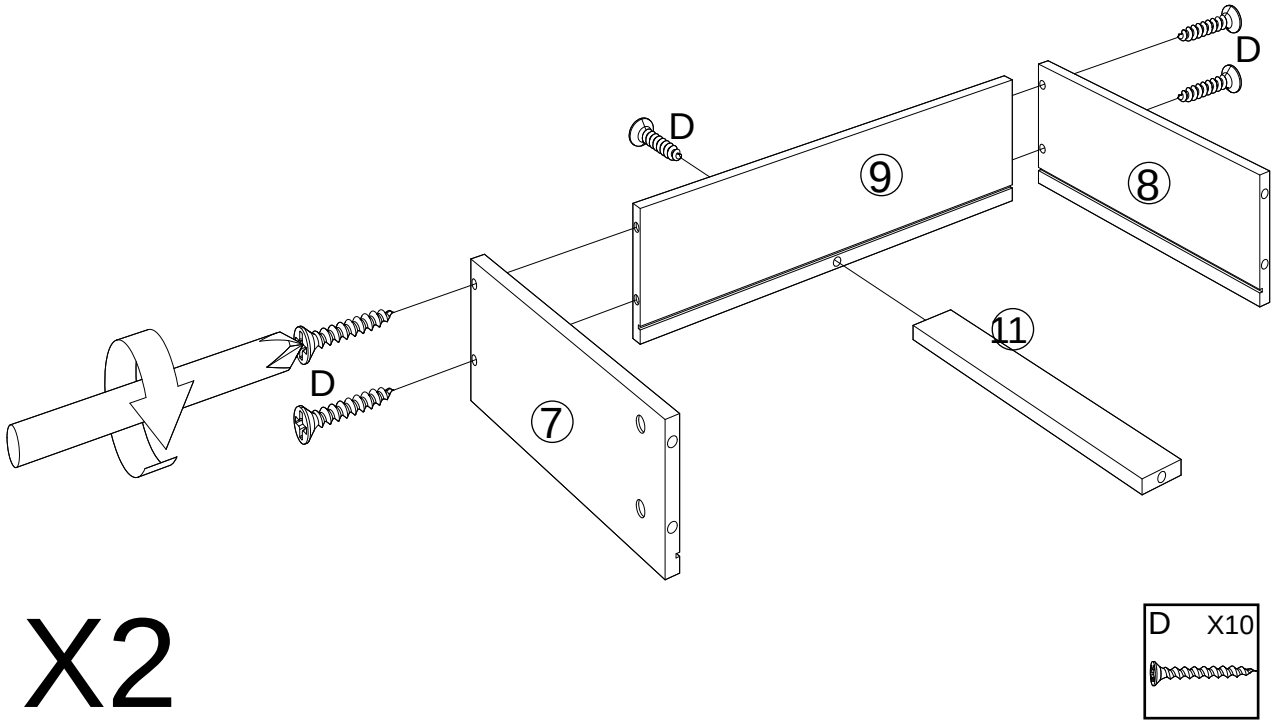

X2

STEP 13:

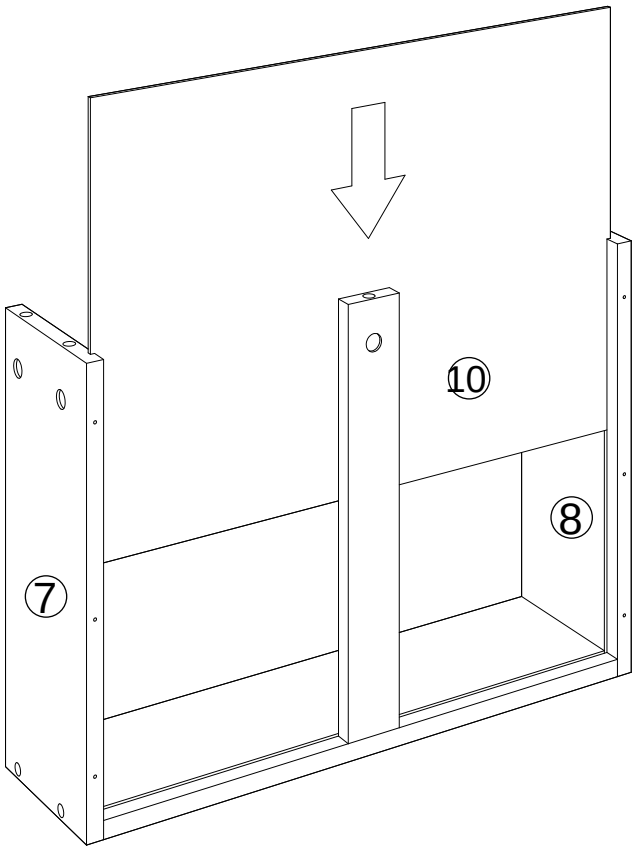

X2

STEP 14:

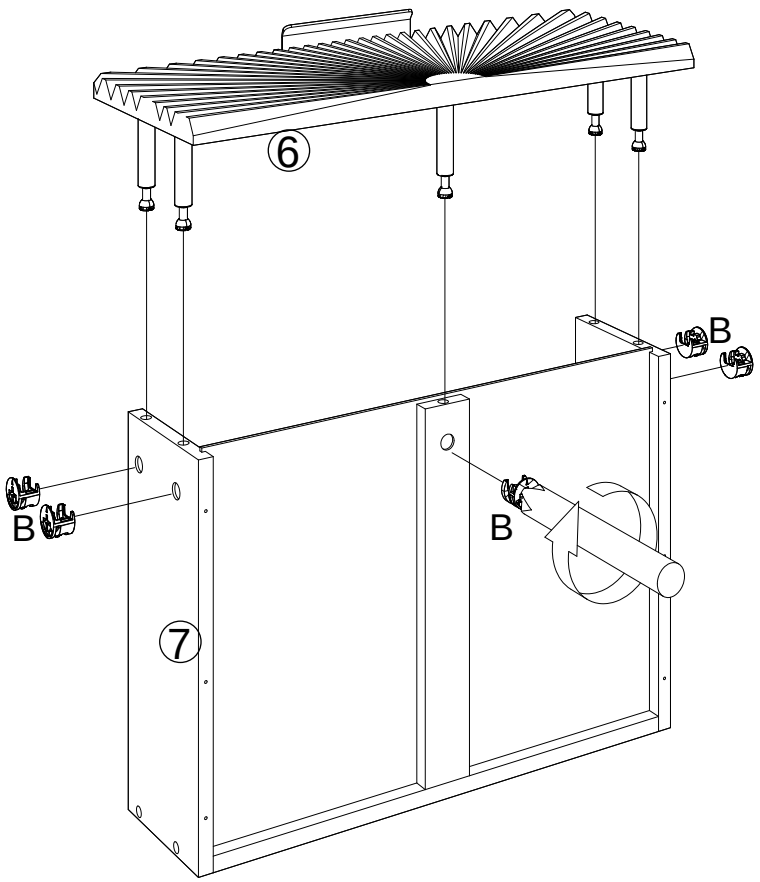

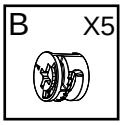

STEP 15:

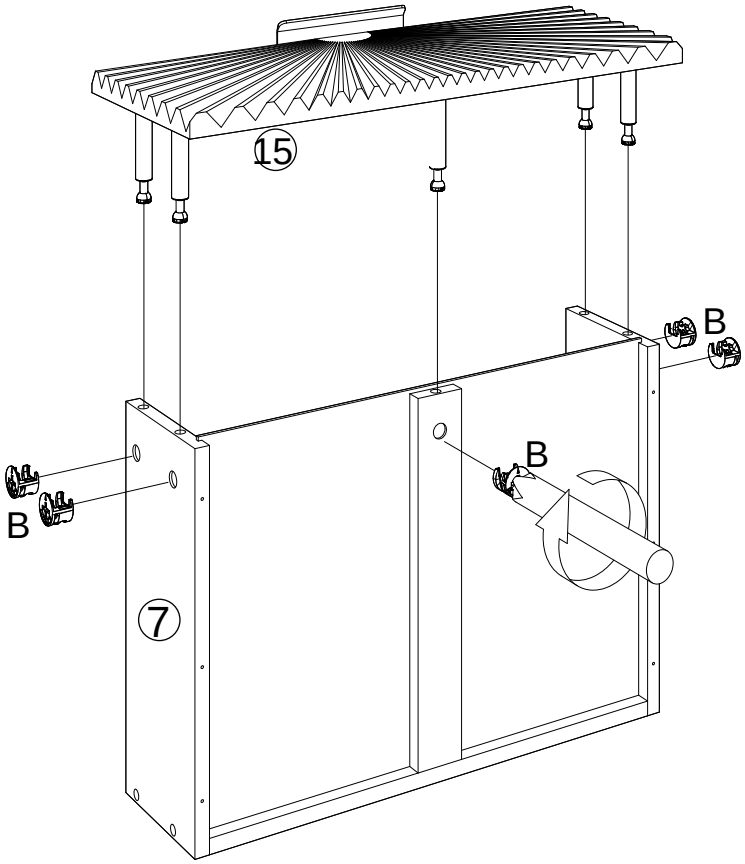

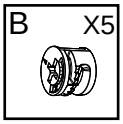

STEP 16:

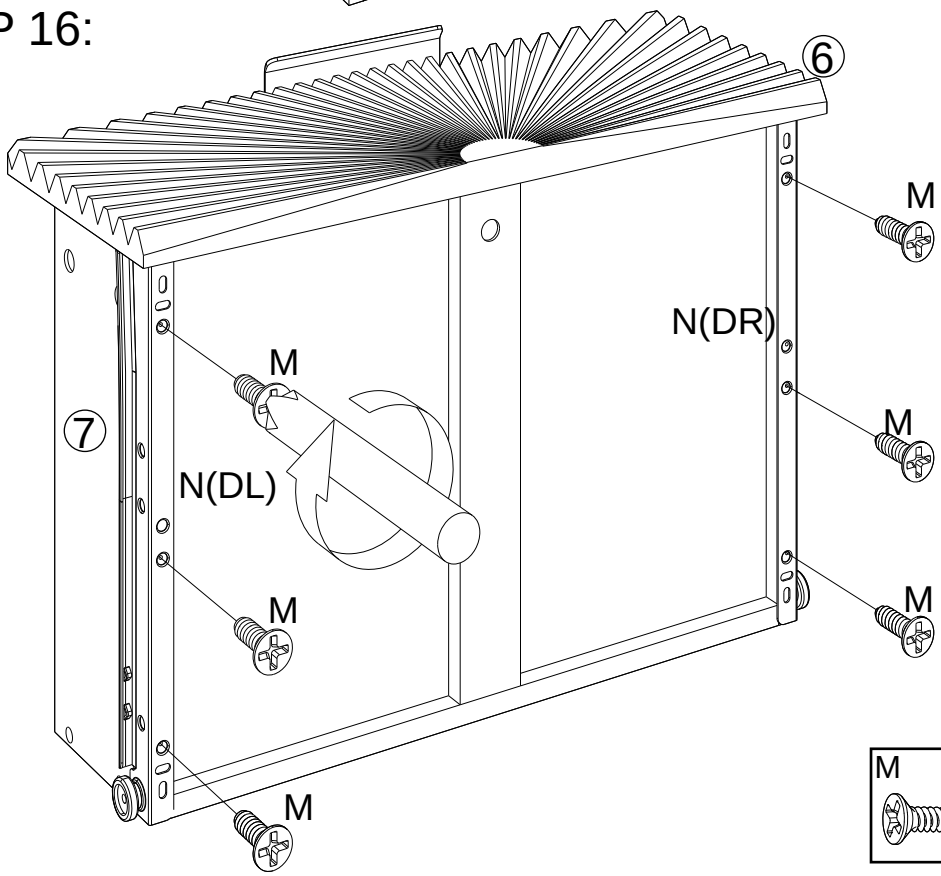

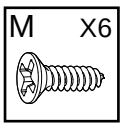

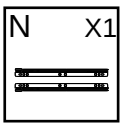

STEP 17:

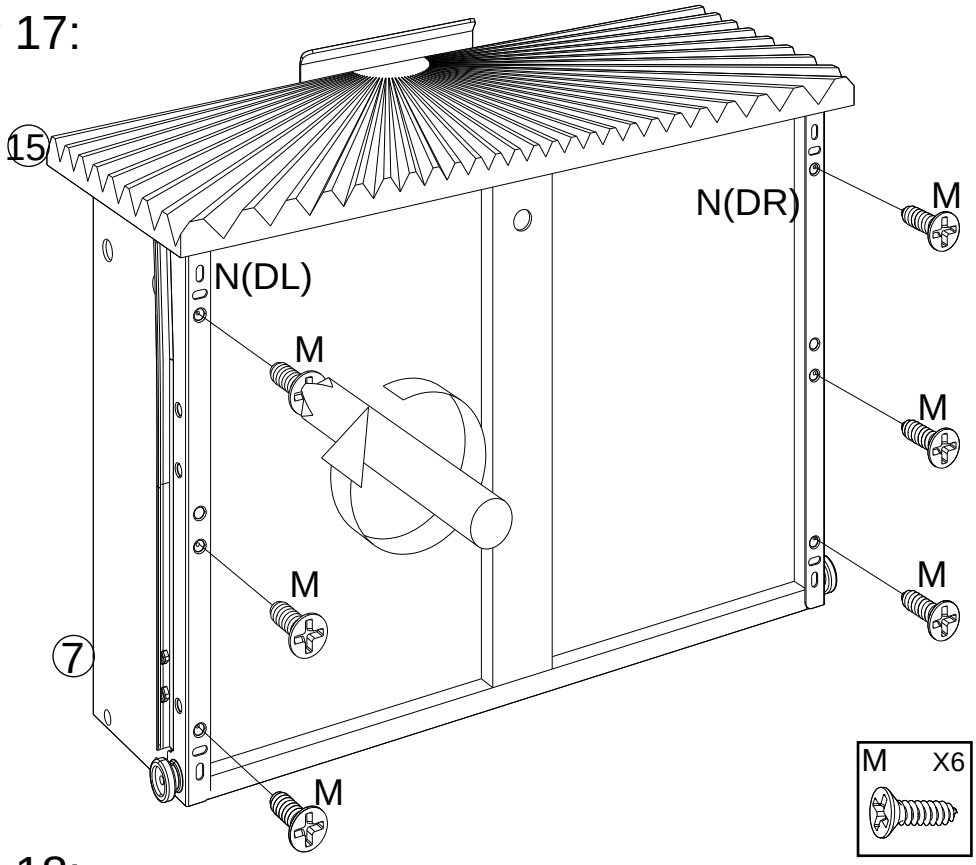

STEP 18:

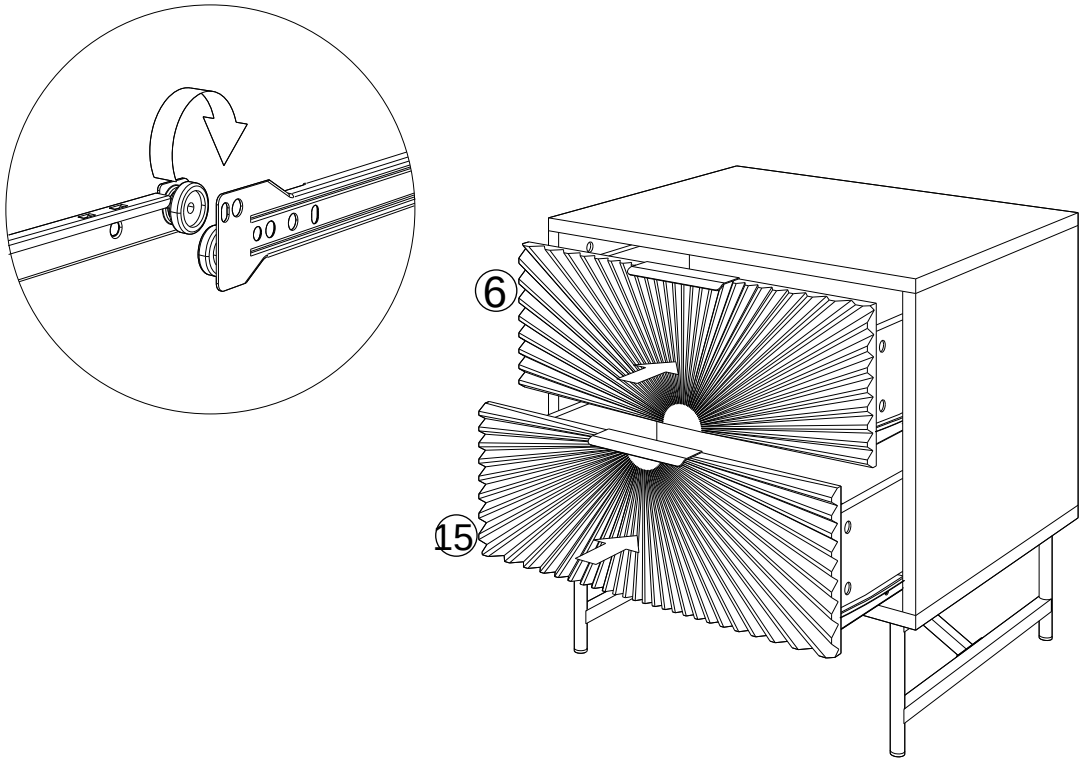

STEP 19:

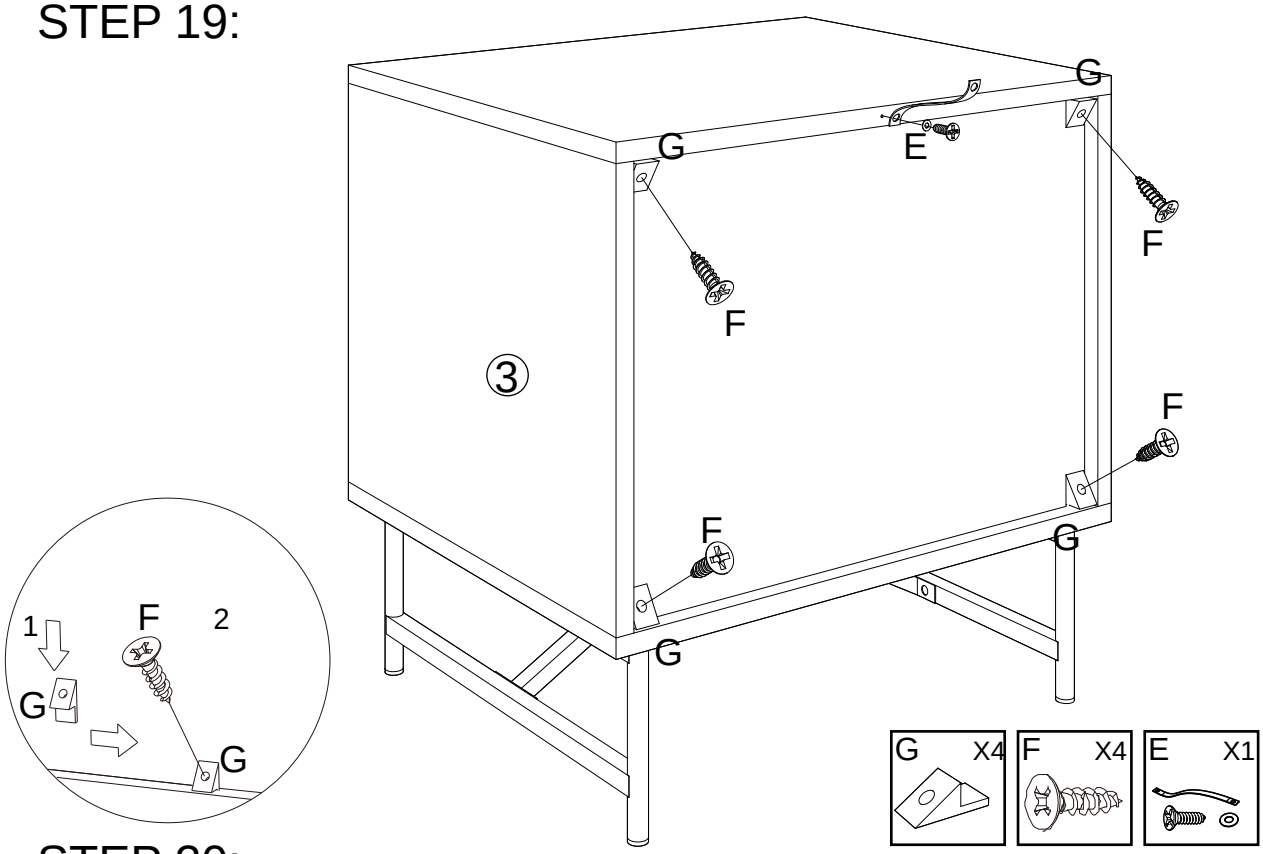

STEP 20:

WALL

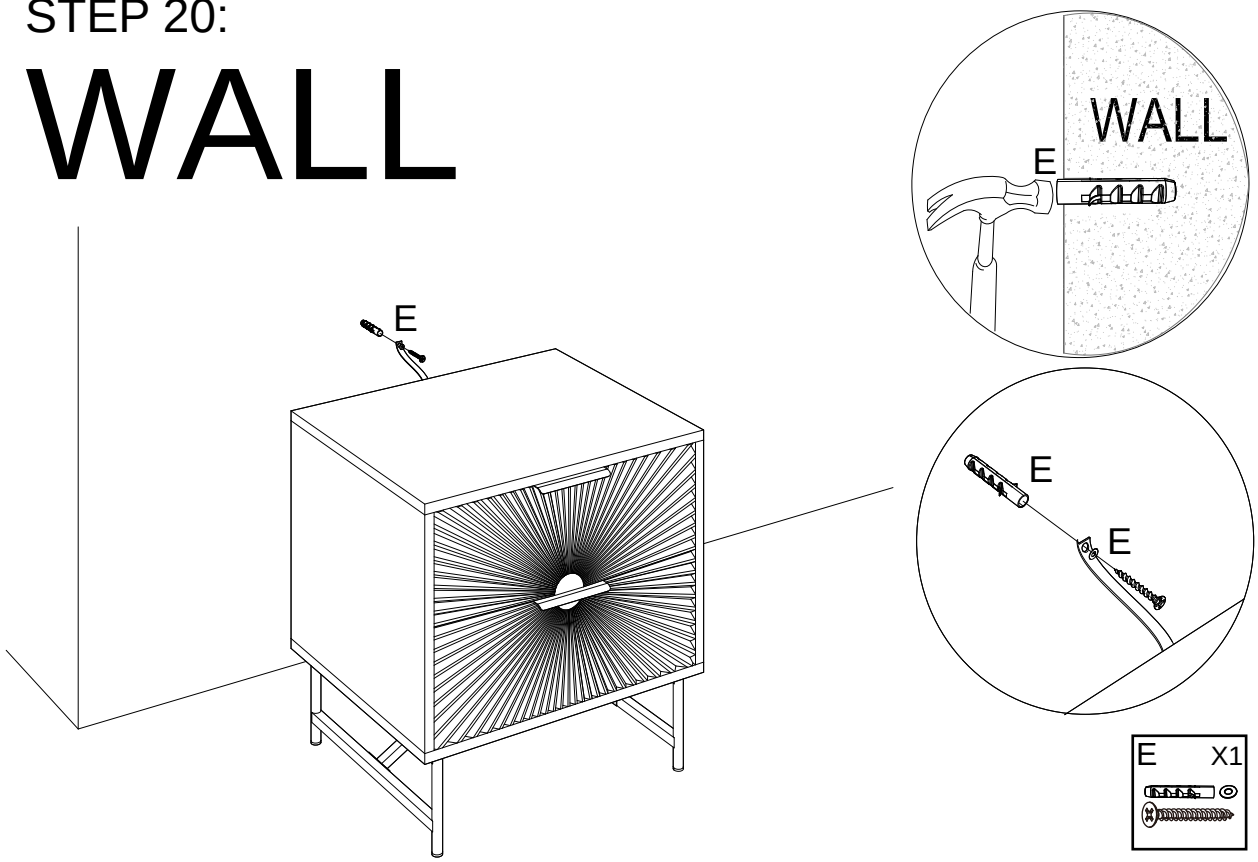

ASSEMBLY IS COMPLETE

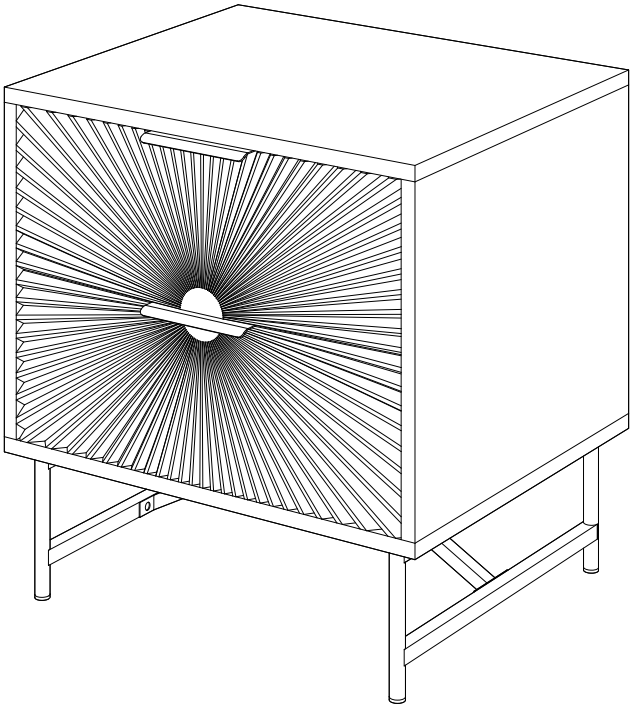

DO NOT DRAG:
Do not drag the item as this may cause damage to the legs.
Instead,use 2 people to lift carefully and with caution from either end.

SAFETY BRACKETS INSTRUCTIONS

1. Attach the strap to the furniture frame with the small screw and washer.
2. Move the furniture to its final position.Attach the strap to the wall with the large screw and washer. If mounting into brick or masonry you will need to acquire wall anchors.
3. Make sure that the strap is firmly attached to the wall and furniture and that the wall strap is snug.

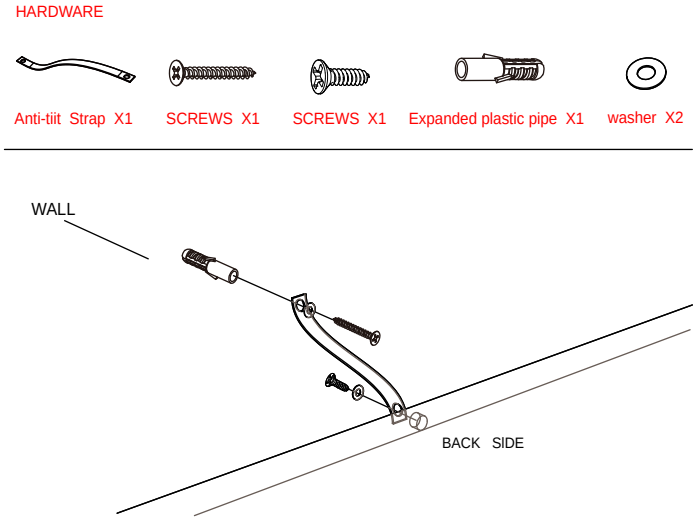

To protect your furniture, we suggest the following:

- Avoid placing your furniture in direct sunlight.
- Do not place furniture directly under windows.
- Do not place sharp materials (knife, fork, etc.) directly onto your furniture as sharp material may scrape and damage the finish.
- Do not place material with high temperature directly onto the surface of your furniture.
- Clean up spills quickly. Water left over a prolonged period of time may cause damage. Alcohol, perfume, nail polishes, aftershave and some medication may cause severe finish damage if not cleaned immediately.
- Use a clean, soft, dry, lint free absorbent cloth to clean your furniture. Do not use any detergent as they may contain ingredients that may react and damage the finish.

NOTE: If the above care advise is not adhered to your product warranty may become void